# 9· t95L¢95 9[9/¢wL/ ![ t9w aL¢¢LbD / I 9/Y[L{¢ Chw w9{L59b¢L![
# {OLAR PHOTOVOLTAIC SYSTEMS Lb . ¦ wL9b£ ² !

*Contractors can apply for an expedited permit where the PV system meets the rŜIjdzŽŜYŜyŭă ťăŭŜŘ in this Checklist and use a template electrical diagram provided by the City or other approved diagram. All project plans and supporting documentation must be provided on site for the inspector.*

**--------TO BE COMPLETED BY APPLICANT-------**

## ❶ Project Information

| | | | |
|---|---|---|---|
| Property Owner Name: | | | |
| Project Address: | | Parcel # | |
| | City: | State: | ZIP: |
| Day Phone: | | | |
| Contractor Name | | | |
| Contractor License #: | | | |
| Contractor Day Phone: | | | |
| PV system description (include manufacturer and model # of PV modules and inverters): | | | |

## ❷ Determine if your project qualifies for an ŜĚLJŜŘŽŭŜŘ electrical permit

| | Yes | No | N/A |
|---|---|---|---|
| 1. PV modules, inverters, and combiner boxes are identified for use in PV systems. | ☐ | ☐ | |
| 2. The inverters are listed and labeled in accordance with UL 1741 and are listed for utility interaction. | ☐ | ☐ | |
| 3. The AC interconnection point is on the load side of service disconnect. [NEC 690.64(B)] | ☐ | ☐ | |
| 4. The system meets all current NEC, City and Washington Cities Electrical Code requirements. | ☐ | ☐ | |
| 5. For Split-Buss modules the AC interconnection must be one of the six service disconnects. | ☐ | ☐ | ☐ |

6. Maximum load added to the panelboard is based on the rating of the panelboards bus/main OCPD combination in accordance with NEC 705.12(D)(2)(3)(b), and is limited to (check combination that applies):

☐225 amp bus/200 amp main OCPD - 13,440 AC watts, maximum 70 amp inverter OCPD.
☐225 amp bus/225 amp main OCPD - 8,640 AC watts, maximum 45 amp inverter OCPD.
☐200 amp bus/200 amp main OCPD - 7,860 AC watts, maximum 40 amp inverter OCPD.
☐150 amp bus/150 amp main OCPD - 5,760 AC watts, maximum 30 amp inverter OCPD.
☐125 amp bus/125 amp main OCPD - 4,800 AC watts, maximum 25 amp inverter OCPD.
☐125 amp bus/100 amp main OCPD - 9,600 AC watts, maximum 50 amp inverter OCPD.

| |
|---|
| ☐100 amp bus/100 amp main OCPD - 3,840 AC watts, maximum 20 amp inverter OCPD.<br>**☐Other- Electrical Permit with ŦdzŤf Plan Review Required**<br>***Note 1:*** *Listed un-altered factory main/bus combination. Alteration of the panelboard main OCPD will require plan review.*<br>***Note 2:*** *The circuit conductors and overcurrent devices shall be sized to carry not less than 125 percent of the maximum currents as calculated in 690.8(A). The rating or setting of overcurrent devices shall be permitted in accordance with 240.4(B) and (C).NEC 690.8(B)(1)*<br>***Note 3:*** *If a panelboard employs a snap switch rated 30 amperes or less in any branch circuit, it cannot be rated more than 200 amperes unless there is a supply side overcurrent protection at 200 amperes or less within the panelboard. This requirement does not apply to panelboards equipped with circuit breakers. Section 408.36(A) of the NEC.* |
| 7. I have attached the following Electrical One-Line Diagram:<br>☐Standard Electrical Diagram- 6 Strings or Less<br>☐Standard Electrical Diagram- 4 Strings or Less<br>☐Standard Electrical Diagram- Micro Inverter<br>**☐None of the above- Electrical Permit with Plan Review Required** |

| | |
|---|---|
| Comments: | |

**If you answered yes to all of the above questions, your project qualifies for I·y ŜÈLJŜŘλŭŜŘ electrical permit.**

## ❸ Submit this Checklist, the Electrical Permit Application, One-line Diagram, and Site Plan to: /λŭè 2Ŧ .dzNJλŜy ПЛЛ { ² мрнуŘ {ŭNJŜŜŭ {¢9 оллΣ .dzNJλŜyΣ ² !

**As the property owner or authorized representative of the above listed property, I attest that all information in this checklist is accurate to the best of my knowledge**

| | |
|---|---|
| Applicant Signature: | Date: |
| Applicant Name (Please Print): | |

## --------TO BE COMPLETED BY CITY STAFF------

| | |
|---|---|
| Qualifies for Electrical OTC? ☐Yes ☐No<br>Staff Initials _____ Date: | Permit #: |

The electrical one-line diagram must be used to accurately represent the electrical components of the solar PV system and shall include:

- ☐ The correct conductor sizing based on the ambient temperature, number of conductors, and distance of conduit off the roof.
- ☐ The correct "Output circuit" conductors sizing from the combiner to the inverter based on the number of strings multiplied by the "Max amps."
- ☐ Where a combiner box is installed, or where more than two strings of modules are electrically connected together in "parallel," each individual string shall be protected by its own overcurrent protection device or feeders are for the sum of the short circuit current of all strings. The fuse or breaker shall be listed as being suitable for use in a DC circuit and shall meet or exceed the maximum voltage of the circuit. The rating of the fuse or circuit breaker shall not be larger than the maximum size specified on the lowest rated module in the string.
- ☐ Per NEC Section 690.31(E), metallic raceway and enclosures must be used where DC wiring is installed inside of the house.
- ☐ Grounding on the DC side of the inverter requires a minimum #8 copper grounding electrode conductor run un-spliced from the factory identified system grounding terminal of the inverter to the grounding electrode system of the house.
- ☐ The inverter shall be listed and labeled by a recognized electrical testing laboratory and be identified as "Utility interactive."
- ☐ Inverter ground fault protection (GFP) shall comply with NEC 690.5.
- ☐ A performance meter and a safety disconnect switch may be required to be installed between the PV power source and the electrical utility equipment. Contact the local serving utility for requirements. Where a performance meter is required by the local utility to record the power produced by the PV system, the output wiring from the inverter shall always connect to the "LINE" side terminals of the meter.
- ☐ Where disconnect switches (with or without fuses) are installed in the circuit from the inverter output terminals to the house electrical panel, the wiring originating at the inverter(s) shall always connect to the "LOAD" side terminals of ANY disconnect that has been installed.
- ☐ The connection to the service panel shall be through a dedicated circuit breaker that connects to the panel bus bars in an approved manner.
- ☐ "Load Side Taps" where the inverter AC wiring does not terminate using a dedicated breaker or set of fuses are prohibited under ANY condition by NEC 690.64(B).
- ☐ The location of the PV backfed breaker must be identified per 690.64(B)(7) with the following verbiage: **"WARNING INVERTER OUTPUT CONNECTION. DO NOT RELOCATE THE OVERCURRENT DEVICE."**
- ☐ Where it is not possible to locate the PV breakers at opposite ends of the panel bus, the sum of the two PV breakers is not permitted to exceed 100% of the bus rating per NEC 690.64(B)(7)
- ☐ Per NEC 690.53, a permanent label for the DC power source shall be installed at the PV DC disconnecting means. This label shall show the following:
    - Rated maximum power-point current.
    - Rated maximum power-point voltage.
    - Maximum system voltage.
    - Short circuit current of the PV system.

| TAG | EQUIPMENT SCHEDULE | | | | | |
|---|---|---|---|---|---|---|
| 1 | SOLAR PV MODULE | MAKE: | MODEL: | | | (Attach Cut Sheet - See notes for ratings) |
| 2 | PV ARRAY | WEIGHT: | HEIGHT FROM ROOF: | | | (Attach cut sheet of mounting system) |
| 3 | J-BOX | LENGTH: | WIDTH: | HEIGHT: | NEMA RATING: | |
| 4 | COMBINER | MAKE: | MODEL: | | | (Attach cut sheet) |
| 5 | DC DISCONNECT | VDC: | DC AMP: | MAKE: | | |
| 6 | DC/AC INVERTER | MAKE: | | | | (Attach cut sheet - See notes for ratings) |
| 7 | AC DISCONNECT | VAC: | AMPS: | MODEL: | | |
| 8 | PRODUCTION METER | METER #: | | (Check with serving utility for meter requirements & location) | | |
| 9 | SERVICE PANEL | VAC: | MAIN OCPD: | BUS AMP: | INVERTER OCPD: | |

| Contractor - Installer Information | |
|---|---|
| Permit #: | Date: |
| Name: | |
| Address: | |
| Contact Name: | |
| Contact Phone: | |
| Email: | |

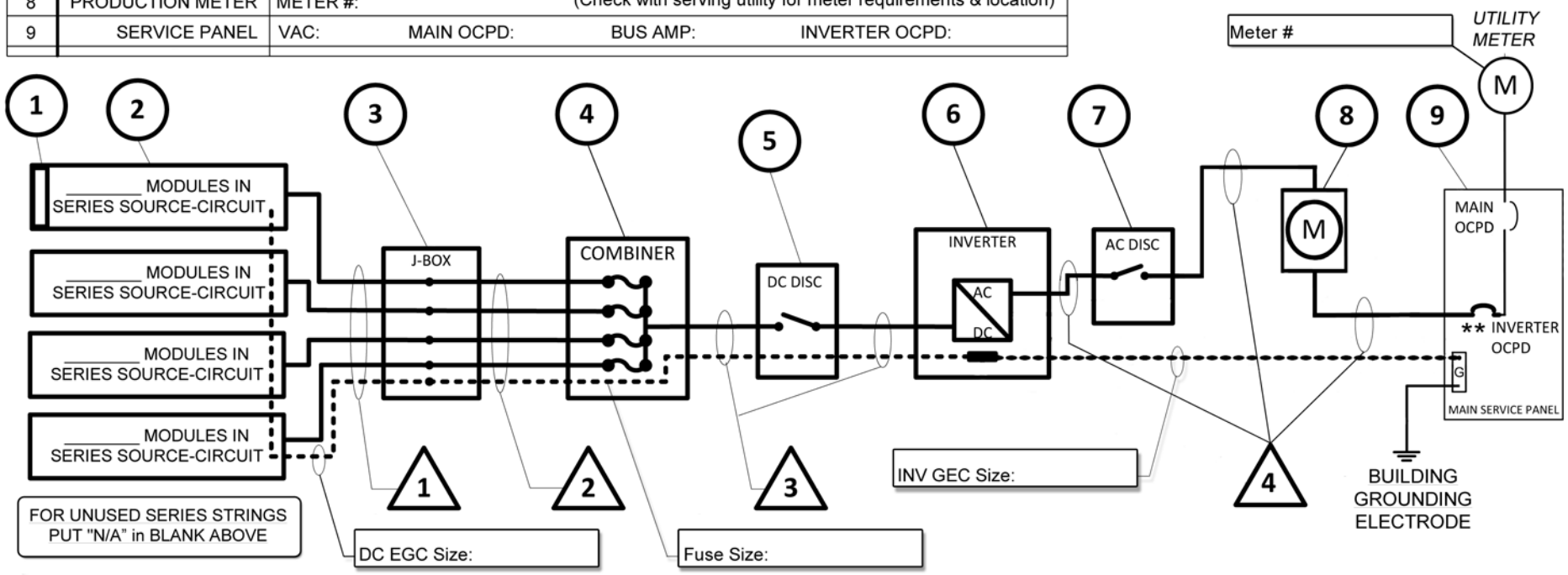


| TAG | Conductor Insulation Type | CU/AL | Conductors | | | *Derated Amps | Raceway | | Ambient Temp | | Distance off Roof | |
|---|---|---|---|---|---|---|---|---|---|---|---|---|
| | | | Size | Amps | Num | | Size | Type | Roof | Attic | | |
| 1 | | | | | | | | | | | | |
| 2 | | | | | | | | | | | | |
| 3 | | | | | | | | | | | | |
| 4 | | | | | | | | | | | | |

*Note: Derating of conductors based on number of conductors in raceway, ambient temp and distance off roof where applicable. (NEC 310.15)

**Note: Conductors and overcurrent devices shall be sized to carry not less than 125 percent of the maximum currents. (NEC 690.8(B))

*Standard Electrical Diagram - Residential Small Scale PV System*
*Central Inverter Systems*

*THIS PLAN MUST BE PROVIDED TO THE INSPECTOR AT THE JOB SITE*

*Site Name:*

*Site Address:*

*This plan is NOT intended to be used with micro inverters or transformer-less inverters. Conductors, where installed outdoors in raceways shall be "W" rated and have an insulation rating of 90 deg C.*

Rev - 02/21/2013

| NOTES for Residential Small Scale PV System Electrical Diagram | |
|---|---|
| Permit #: | Date: |
| Contractor: | |
| Job Address: | |
| Contact Name: | |
| Contact Phone: | |
| | |

## SIGNS

### SIGN FOR DC DISCONNECT

| PHOTOVOLTAIC POWER SOURCE | |
|---|---|
| RATED MPP CURRENT | A |
| RATED MPP VOLTAGE | V |
| MAX SYSTEM VOLTAGE | V |
| MAX CIRCUIT CURRENT | A |
| WARNING: ELECTRICAL SHOCK HAZARD–LINE AND LOAD MAY BE ENERGIZED IN OPEN POSITION | |

### SIGN FOR INVERTER OCPD AND AC DISCONNECT (IF USED)

| SOLAR PV SYSTEM AC POINT OF CONNECTION | |
|---|---|
| AC OUTPUT CURRENT | A |
| NOMINAL AC VOLTAGE | V |
| THIS PANEL FED BY MULTIPLE SOURCES (UTILITY AND SOLAR) | |

## PV MODULE RATINGS

| | |
|---|---|
| MODULE MAKE | |
| MODULE MODEL | |
| MAX POWER-POINT CURRENT ($I_{MP}$) | A |
| MAX POWER-POINT VOLTAGE ($V_{MP}$) | V |
| OPEN-CIRCUIT VOLTAGE ($V_{OC}$) | V |
| SHORT-CIRCUIT CURRENT ($I_{SC}$) | A |
| MAX SERIES FUSE (OCPD) | A |
| MAXIMUM POWER ($P_{MAX}$) | W |
| MAX VOLTAGE (TYP 600$V_{DC}$) | V |
| VOC TEMP COEFF (mV/°C ☐ or %/°C ☐) | |
| IF COEFF SUPPLIED, CIRCLE UNITS | |

## INVERTER RATINGS

| | |
|---|---|
| INVERTER MAKE | |
| INVERTER MODEL | |
| MAX DC VOLT RATING | V |
| MAX POWER @ 40°C | W |
| NOMINAL AC VOLTAGE | V |
| MAX AC CURRENT | A |
| MAX OCPD RATING | A |

| | |
|---|---|
| LOWEST EXPECTED AMBIENT TEMP: | °C |
| HIGHEST CONTINUOUS TEMPERATURE: | °C |

NEC 690.8(B) Photovoltaic system currents shall be considered continuous.

NEC 690.8(B)(1) The circuit conductors and overcurrent devices shall be sized to carry not less than125 percent of the maximum currents calculated in 690.8(A).

*Exception: Circuits containing an assembly, together with its overcurrent device(s), that is listed for continuous operation at 100 percent of its rating shall be permitted to be utilized at 100 percent of its rating.*

All signage and markings shall be a phenolic or metalic plate or other similar material in block letters 1/4 inch or greater in height, and suitable for the environment. Letters and background shall be in contrasting colors. Screws, rivets or other approved means shall be used to affix plates to equipment.

| INVERTER | | PANELBOARD | |
|---|---|---|---|
| Maximum Current | OCPD Size | Main Bus | Main OCPD |
| 56 amps | 70 amps | 225 amps | 200 amps |
| 36 amps | 45 amps | 225 amps | 225 amps |
| 33 amps | 40 amps | 200 amps | 200 amps |
| 24 amps | 30 amps | 150 amps | 150 amps |
| 20 amps | 25 amps | 125 amps | 125 amps |
| 16 amps | 20 amps | 100 amps | 100 amps |

| TAG | EQUIPMENT SCHEDULE | | | | | |
|---|---|---|---|---|---|---|
| 1 | SOLAR PV MODULE | MAKE: | MODEL: | | | (Attach Cut Sheet - See notes for ratings) |
| 2 | PV ARRAY | WEIGHT: | HEIGHT FROM ROOF: | | | (Attach cut sheet of mounting system) |
| 3 | J-BOX | LENGTH: | WIDTH: | HEIGHT: | NEMA RATING: | |
| 4 | COMBINER | MAKE: | MODEL: | | | (Attach cut sheet) |
| 5 | DC DISCONNECT | VDC: | DC AMP: | MAKE: | | |
| 6 | DC/AC INVERTER | MAKE: | | | | (Attach cut sheet - See notes for ratings) |
| 7 | AC DISCONNECT | VAC: | AMPS: | MODEL: | | |
| 8 | PRODUCTION METER | METER #: | | (Check with serving utility for meter requirements & location) | | |
| 9 | SERVICE PANEL | VAC: | MAIN OCPD: | BUS AMP: | INVERTER OCPD: | |

| Contractor - Installer Information | |
|---|---|
| Permit #: | Date: |
| Name: | |
| Address: | |
| Contact Name: | |
| Contact Phone: | |
| Email: | |

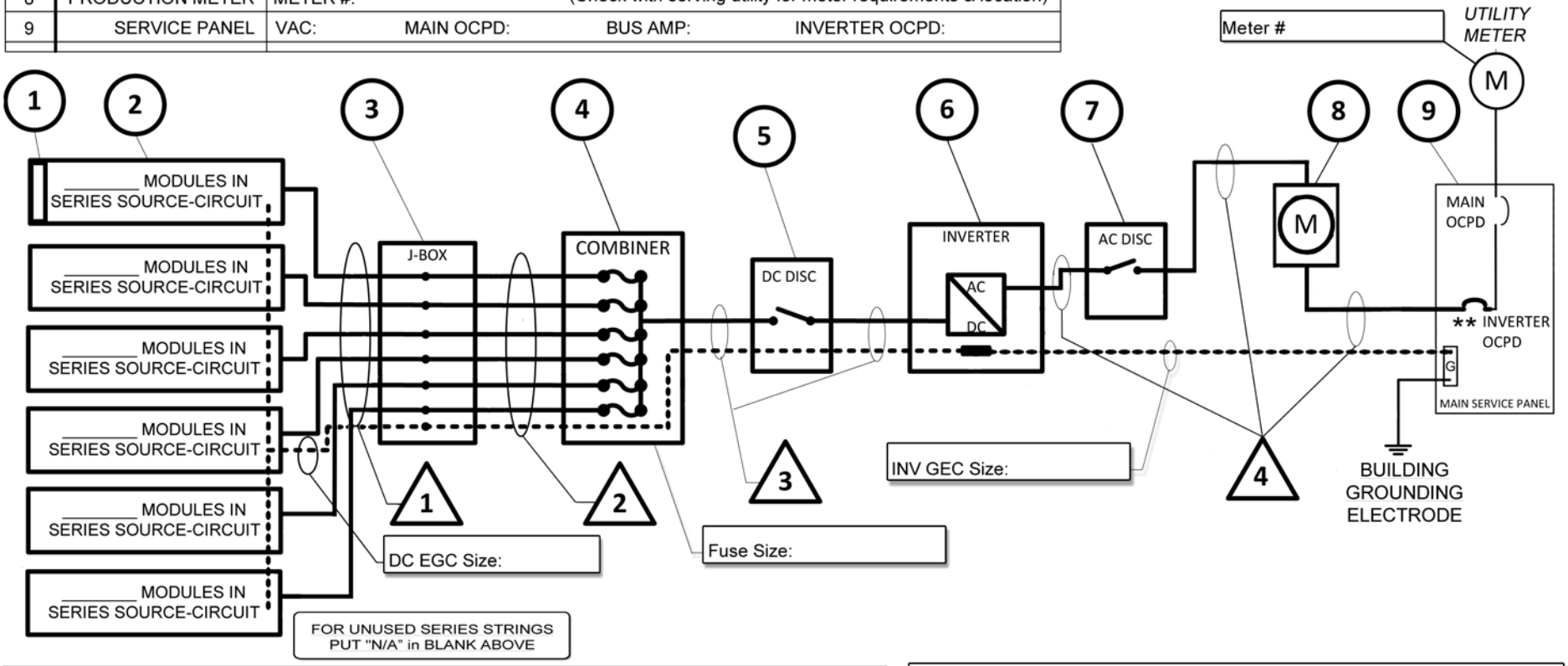


| TAG | Conductor Insulation Type | CU/AL | Conductors | | | *Derated Amps | Raceway | | Ambient Temp | | Distance off Roof | |
|---|---|---|---|---|---|---|---|---|---|---|---|---|
| | | | Size | Amps | Num | | Size | Type | Roof | Attic | | |
| 1 | | | | | | | | | | | | |
| 2 | | | | | | | | | | | | |
| 3 | | | | | | | | | | | | |
| 4 | | | | | | | | | | | | |

*Note: Derating of conductors based on number of conductors in raceway, ambient temp and distance off roof where applicable. (NEC 310.15)

**Note: Conductors and overcurrent devices shall be sized to carry not less than 125 percent of the maximum currents. (NEC 690.8(B))

*Standard Electrical Diagram - Residential Small Scale PV System*
*Central Inverter Systems*

*THIS PLAN MUST BE PROVIDED TO THE INSPECTOR AT THE JOB SITE*

*Site Name:*

*Site Address:*

*This plan is NOT intended to be used with micro inverters or transformer-less inverters. Conductors, where installed outdoors in raceways shall be "W" rated and have an insulation rating of 90 deg C.*

Rev - 02/23/2013

| NOTES for Residential Small Scale PV System Electrical Diagram | |
|---|---|
| Permit #: | Date: |
| Contractor: | |
| Job Address: | |
| Contact Name: | |
| Contact Phone: | |
| | |

## SIGNS

### SIGN FOR DC DISCONNECT

| PHOTOVOLTAIC POWER SOURCE | |
|---|---|
| RATED MPP CURRENT | A |
| RATED MPP VOLTAGE | V |
| MAX SYSTEM VOLTAGE | V |
| MAX CIRCUIT CURRENT | A |
| WARNING: ELECTRICAL SHOCK HAZARD–LINE AND LOAD MAY BE ENERGIZED IN OPEN POSITION | |

### SIGN FOR INVERTER OCPD AND AC DISCONNECT (IF USED)

| SOLAR PV SYSTEM AC POINT OF CONNECTION | |
|---|---|
| AC OUTPUT CURRENT | A |
| NOMINAL AC VOLTAGE | V |
| THIS PANEL FED BY MULTIPLE SOURCES (UTILITY AND SOLAR) | |

## PV MODULE RATINGS

| | |
|---|---|
| MODULE MAKE | |
| MODULE MODEL | |
| MAX POWER-POINT CURRENT ($I_{MP}$) | A |
| MAX POWER-POINT VOLTAGE ($V_{MP}$) | V |
| OPEN-CIRCUIT VOLTAGE ($V_{OC}$) | V |
| SHORT-CIRCUIT CURRENT ($I_{SC}$) | A |
| MAX SERIES FUSE (OCPD) | A |
| MAXIMUM POWER ($P_{MAX}$) | W |
| MAX VOLTAGE (TYP 600$V_{DC}$) | V |
| VOC TEMP COEFF (mV/°C ☐ or %/°C ☐) | |
| IF COEFF SUPPLIED, CIRCLE UNITS | |

## INVERTER RATINGS

| | |
|---|---|
| INVERTER MAKE | |
| INVERTER MODEL | |
| MAX DC VOLT RATING | V |
| MAX POWER @ 40°C | W |
| NOMINAL AC VOLTAGE | V |
| MAX AC CURRENT | A |
| MAX OCPD RATING | A |

| | |
|---|---|
| LOWEST EXPECTED AMBIENT TEMP: | °C |
| HIGHEST CONTINUOUS TEMPERATURE: | °C |

NEC 690.8(B) Photovoltaic system currents shall be considered continuous.

NEC 690.8(B)(1) The circuit conductors and overcurrent devices shall be sized to carry not less than125 percent of the maximum currents calculated in 690.8(A).

*Exception: Circuits containing an assembly, together with its overcurrent device(s), that is listed for continuous operation at 100 percent of its rating shall be permitted to be utilized at 100 percent of its rating.*

All signage and markings shall be a phenolic or metalic plate or other similar material in block letters 1/4 inch or greater in height, and suitable for the environment. Letters and background shall be in contrasting colors. Screws, rivets or other approved means shall be used to affix plates to equipment.

| INVERTER | | PANELBOARD | |
|---|---|---|---|
| Maximum Current | OCPD Size | Main Bus | Main OCPD |
| 56 amps | 70 amps | 225 amps | 200 amps |
| 36 amps | 45 amps | 225 amps | 225 amps |
| 33 amps | 40 amps | 200 amps | 200 amps |
| 24 amps | 30 amps | 150 amps | 150 amps |
| 20 amps | 25 amps | 125 amps | 125 amps |
| 16 amps | 20 amps | 100 amps | 100 amps |

| **SITE PLAN**<br>RESIDENTIAL SMALL SCALE PV SYSTEM | | Provide roof outline with location of all PV panels, j-box, combiner and DC disconnect. | |
|---|---|---|---|
| Permit #: | Date: | Contractor: | Contrator Phone: |
| Job Address: | | Contact Name: | Contact Phone: |